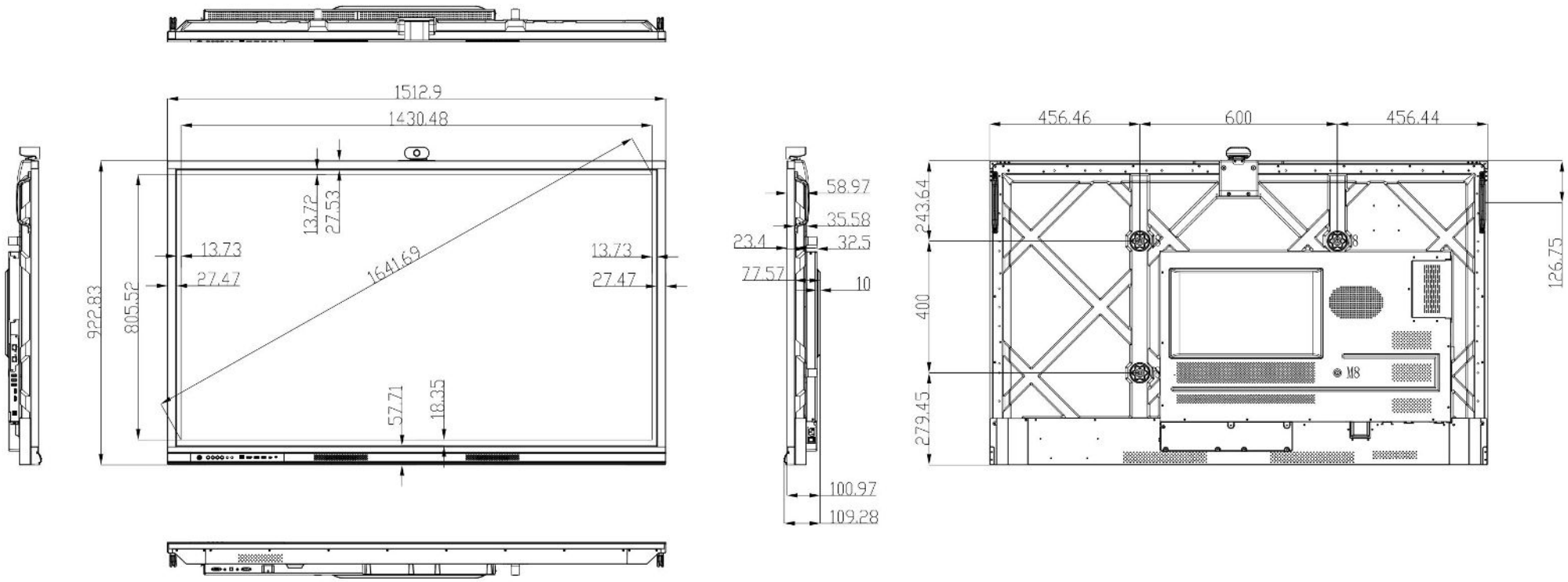
1512.9
1430.48
13.72
27.53
13.73
27.47
1641.69
13.73
27.47
922.83
805.52
57.71
18.35
58.97
35.58
23.4
32.5
77.57
10
100.97
109.28
456.46
600
456.44
243.64
400
279.45
126.75
M8
M8